SNC·LAVALIN

ATKINS
Member of the SNC-Lavalin Group

Liphook Phase II Transport Feasibility Study

Transport Feasibility Study

Hampshire County Council

July 2018

Notice

This document and its contents have been prepared and are intended solely as information for Hampshire County Council and use in relation to Liphook Phase II Transport Feasibility Study.

Atkins Limited assumes no responsibility to any other party in respect of or arising out of or in connection with this document and/or its contents.

This document has 35 pages including the cover.

Document history

Revision	Purpose description	Origin-ated	Checked	Reviewed	Author-ised	Date
Rev 1.0	Draft for Comment	BH	GM	BH	GM	25/05/18
Rev 2.0	Final for Issue	BH	GM	BH	GM	03/07/18

Client signoff

Client	Hampshire County Council
Project	Liphook Phase II Transport Feasibility Study
Job number	5161097
Client signature / date	

Table of contents

Tables

Figures

Executive Summary

Atkins have been instructed by Hampshire County Council (HCC) to undertake a 'Phase II Transport Feasibility Study' on behalf of East Hampshire District Council (EHDC). The Phase II study is required to better understand the current traffic flows through Liphook, focusing on the double mini-roundabouts at The Square, and to use these flows to carry out an initial assessment of the viability of the strategic mitigation options identified in the Phase I study. The study also identifies the perceived issue of traffic travelling through the village to / from the A3 to Haslemere (which is locally thought to contribute to current congestion issues).

The study concluded that a significant proportion of traffic travelling through the double mini-roundabouts is not strategic traffic, therefore a revised signage strategy is not warranted.

The high-level analysis of the strategic mitigation options suggests that Strategic Mitigation Options 1, 2 or 3 (which all provide a road link from Haslemere Road to London Road) could provide the most relief to the double mini-roundabouts but, could result in a reassignment of traffic along inappropriate local roads. These options were also identified in the Phase I study to have significant constraints in that they are currently aligned through the 'Memorial Recreation Ground' and 'Radford Park'. This is also applicable to Option 5 ('The Northcott Trust' Western Ring Road), which also has the constraint of being aligned through the SDNP and is estimated to be a very expensive option (due to the length and nature of the SDNP i.e. waterways etc.). Option 4 (The Lowsley Farm Link Road) is deemed not to be a viable option, providing the lowest relief to the double mini-roundabouts, including the constraint of being aligned through an area of SANG.

Therefore, it is recommended that further assessment is undertaken on the double mini-roundabouts at The Square (including the pedestrian crossing) to understand the potential relief that can be attributable to removing traffic from the network from the implementation of sustainable transport options / initiatives (i.e. school / workplace travel planning promoting cycling / walking / public transport and discouraging driving).

This is based on the following findings from the traffic surveys:

- A high proportion of traffic travelling through Liphook at peak times (particularly at the double mini-roundabouts) is local traffic;
- Most vehicles dropping-off / picking-up school children access and exit the schools via Headley Road; and
- None of the strategic mitigation options proposed would accommodate the predominant movement recorded during the ANPR surveys for the AM and PM peak period (Headley Road to London Road and vice-versa).

1. Introduction

Atkins have been instructed by Hampshire County Council (HCC) to undertake a 'Phase II Transport Feasibility Study' on behalf of East Hampshire District Council (EHDC). The Phase II study is required to better understand the current traffic flows through Liphook, focusing on the double mini-roundabouts at The Square.

The study outlines the proportion of Liphook traffic that is considered local (i.e. with an origin or destination within Liphook) or external (i.e. non-local traffic passing through Liphook). This information is subsequently used to assess the viability of the strategic mitigation options identified in the Phase I study.

2. Background - Phase I Transport Feasibility Study (June 2016)

2.1. Introduction

Atkins were commissioned by HCC (on behalf of EHDC) to undertake a Transport Feasibility Study for Liphook. This study (which constitutes Phase 1 was undertaken in June 2016) considered the cumulative impact of developments proposed within Liphook; focusing on the double mini-roundabouts at The Square. The location of the double mini-roundabouts at The Square and the proposed developments (with associated proposals) is shown in **Figure 2-1**.

Figure 2-1 Liphook Phase I Study – Proposed Development

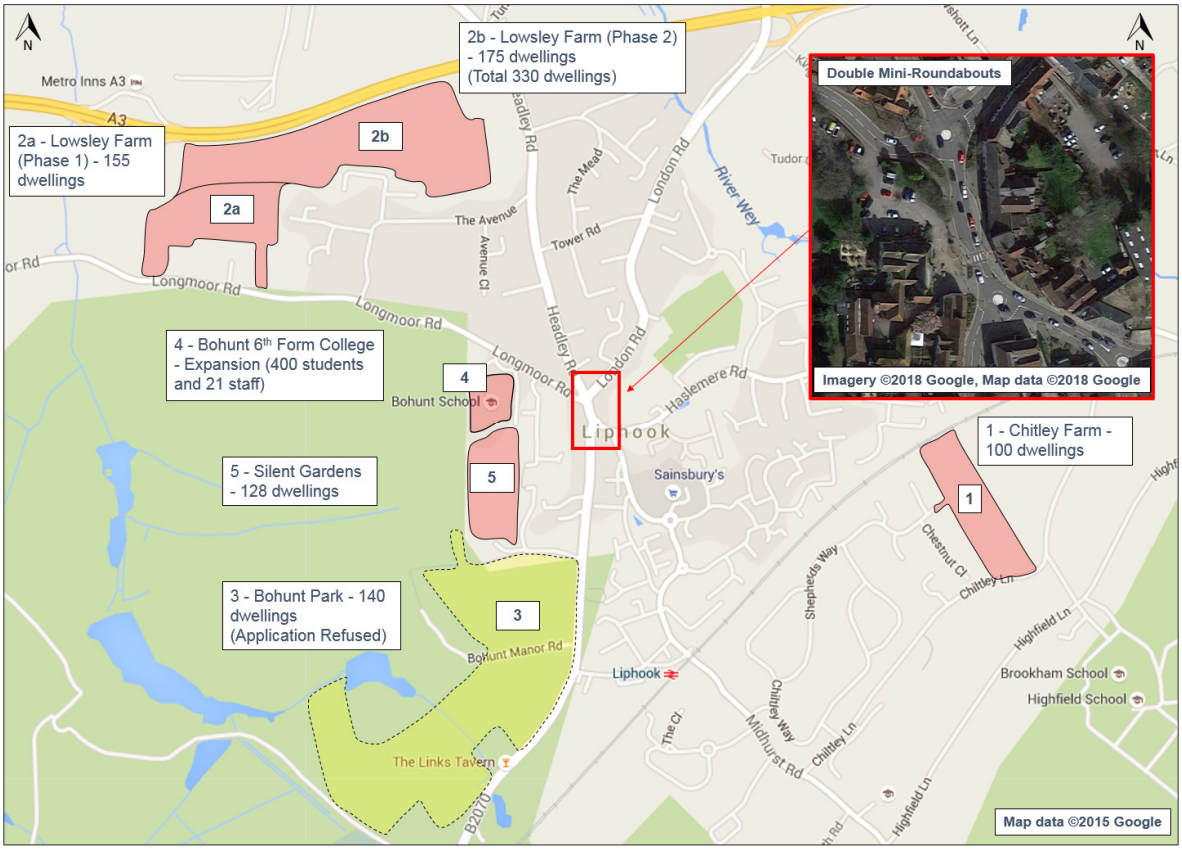

The cumulative trip generation forecast for the proposed developments in Liphook (as outlined in Figure 2-1) was as follows:

- AM Peak (0800-0900)
  - 118 inbound trips to the developments;
  - 246 outbound trips from the developments; and
  - 364 two-way (combined inbound and outbound) trips.
- PM Peak (1700-1800)
  - 198 inbound trips to the developments;
  - 114 outbound trips from the developments; and
  - 312 two-way trips.

The Phase I study concluded that the double mini-roundabouts (The Square) was currently experiencing capacity issues (in the Year 2016) and would further exceed capacity by 2021 with the developments in place. Subsequently, the following three improvement options to the double mini-roundabouts was investigated:

1. Minor modifications to the double mini-roundabouts;
2. Changing the double mini-roundabouts to priority junctions; and
3. Signalising the double mini-roundabouts.

The analysis showed that at best, these options would provide minimal operational benefits and therefore were discarded.

Therefore, the study identified more strategic forms of mitigation; with the aim of reducing the volume of traffic travelling through the double mini-roundabouts at peak times. These five strategic mitigation options are explained in more detail below.

2.2. Strategic Mitigation Options

The five strategic options considered are shown in **Figure 2-2** with a detailed description outlined below.

Figure 2-2 Liphook Phase I Study – Five Strategic Mitigation Options

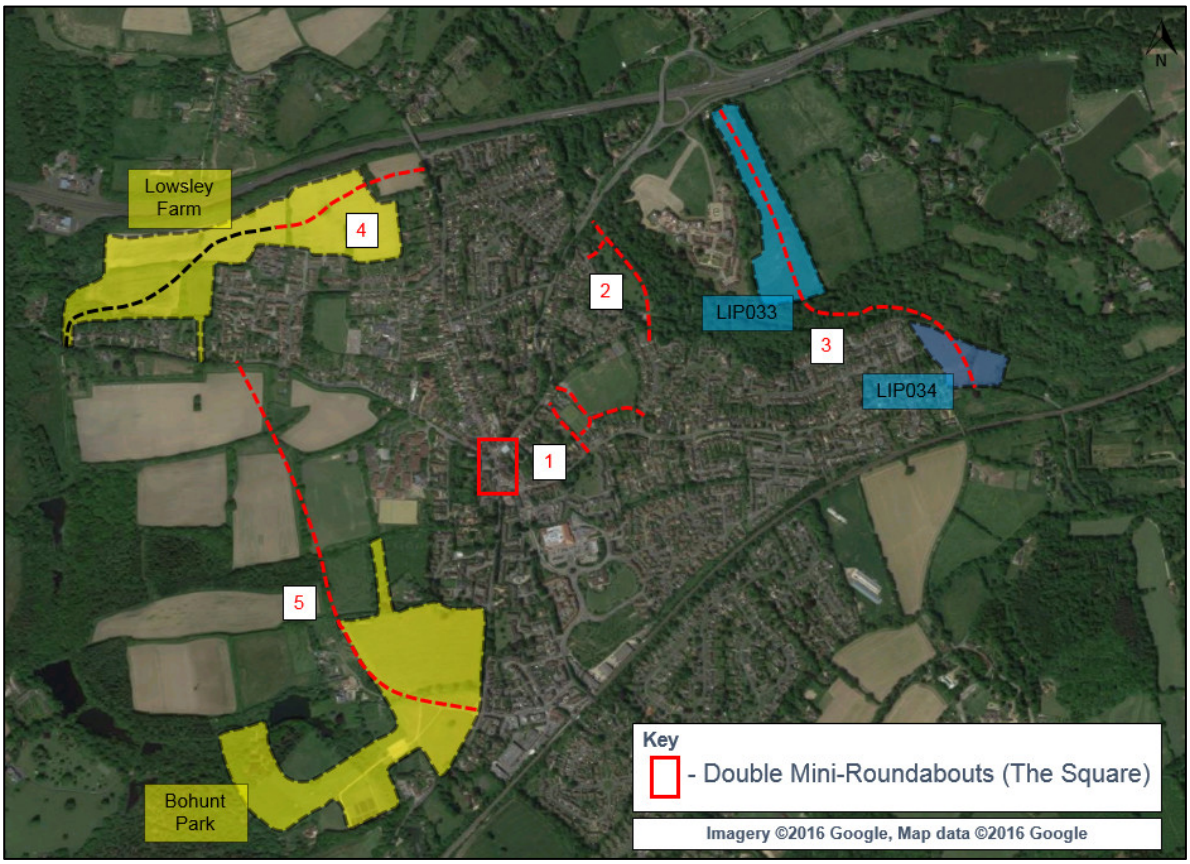

2.2.1. Option 1 – B2131 Haslemere Road to B2131 London Road Link

This option would involve construction of a new short road link through the recreational area directly to the east of the centre of Liphook.

2.2.2. Option 2 – Meadow Way or Malthouse Meadows to B2131 London Road Link

This option would involve construction of a new road link through Radford Park to connect B2131 London Road with either Meadow Way or Malthouse Meadows.

2.2.3. Option 3 – New Eastern Developments Link Road

This option would complement future housing allocations included in the 'Strategic Housing Land Availability Assessment 2014[1]'. It would involve constructing a new road link through housing allocation sites LIP033 (Land East of Bramshott Place) and LIP034 (Land East of Stonehouse Road and north of Haslemere Road) which would need to be connected via a new structure across the River Wey.

2.2.4. Option 4 – Lowsley Farm Link Road

This option consists of extending the Lowsley Farm access road to form a link with the B3004 Headley Road.

2.2.5. Option 5 – 'The Northcott Trust' Western Ring Road

This option would involve construction of a new road link through the South Downs Natural Park (SDNP).

[1] East Hampshire District Council. *Strategic Housing Land Availability Assessment 2014 Included & Excluded Sites – Liphook*. Available online: http://www.easthants.gov.uk/sites/default/files/documents/LiphookSHLAA2014.pdf [Accessed: 22/05/18]

3. Phase II Transport Feasibility Study (May 2018)

3.1. Introduction

The Phase II study is required to better understand the current traffic flows through Liphook, focusing on the double mini-roundabouts at The Square.

The study outlines the proportion of Liphook traffic that is considered local (i.e. with an origin or destination within Liphook) or external (i.e. non-local traffic passing through Liphook). This information is subsequently used to assess the viability of the strategic mitigation options identified in the Phase I study.

It also identifies the number of vehicles (local or external) that are associated with dropping-off or picking-up pupils from Liphook Infant and Junior School as well as Bohunt School.

If the study concludes that a significant proportion of traffic travelling through the double mini-roundabouts (The Square) is not local traffic then future assessments can focus on options for diverting this traffic to more appropriate existing alternative routes (e.g. new strategic signage strategy). Conversely, if the study concludes that a significant proportion of traffic travelling through the double mini-roundabouts is local traffic, then future assessments will focus on options for diverting this traffic away from the double mini-roundabouts (i.e. strategic mitigation options or sustainable transport options / initiatives). This study considers the viability of all options under consideration.

3.2. Methodology

A traffic survey programme was undertaken to determine current traffic flows travelling through Liphook (and the double mini-roundabouts).

3.2.1. Automatic Number Plate Recognition (ANPR) Camera Surveys

To determine the origin and destination of all traffic travelling through Liphook, a series of ANPR cameras were installed at various locations (as shown in **Figure 3-1**):

- A – Longmoor Road;
- B – London Road;
- C – Liphook Road;
- D – Headley Road;
- E – Midhurst Road;
- F – Portsmouth Road;
- G – Station Road; and
- H – Church Road.

ANPR survey cameras record vehicle number plates at specified locations by time and date. This enables construction of a vehicle movement and journey time matrix for a specified study area.

All the ANPR survey cameras (with the exception of ANPR location G which recorded traffic travelling along Station Road) recorded traffic entering and exiting the village.

Figure 3-1 ANPR Camera Locations

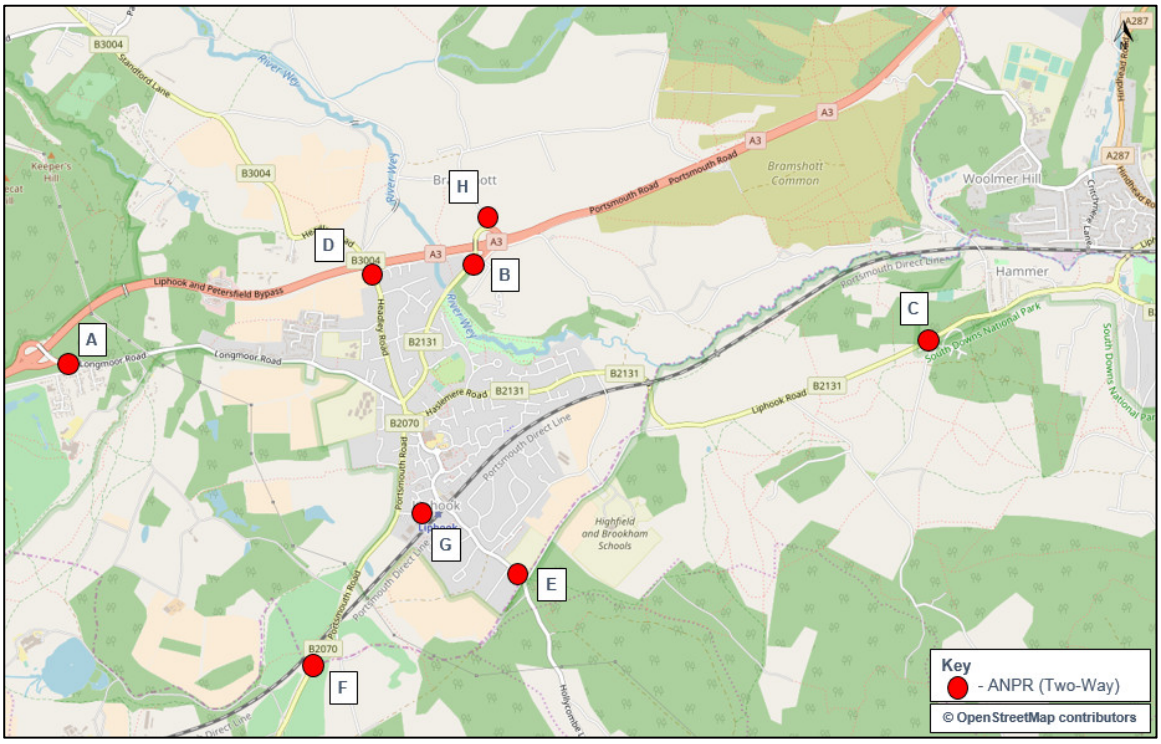

A number of survey methods (other than ANPR) are available to determine the origin and destination of vehicular traffic. The most suitable method (based on sample size, quality and cost) for this study was ANPR surveys. A breakdown of each option is shown in **Appendix A**.

The overall sample rate for the ANPR surveys was 86% (85% in the AM and 86% in the PM survey period).

Consequently, the results outlined in the following sections gives an accurate indication of the traffic movements within Liphook.

3.2.2. School Drop-Off / Pick-Up Manual Number Plate Surveys

To identify the number of vehicles undertaking school drop-off / pick-up as part of their journey, manual number plate surveys were undertaken on the roads in the vicinity of both Liphook Infant and Junior School and Bohunt School.

3.2.3. Junction Turning Counts

Junction Turning Counts were undertaken at the double mini-roundabouts at The Square and at the B2131 Haslemere Road / Midhurst Road mini-roundabout.

All three elements of the traffic survey programme were utilised to determine the proportion of Liphook traffic considered to be local or external.

Figure 3-2 Junction Turning Counts (The Square)

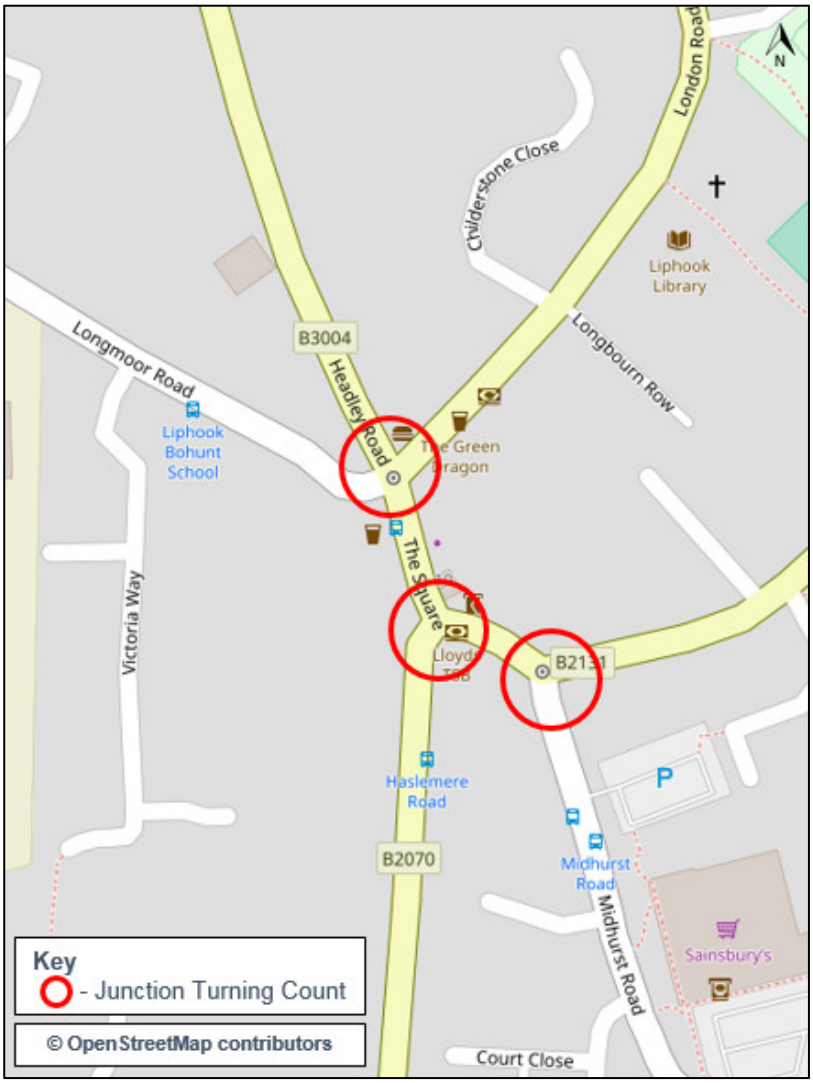

3.2.4. Survey Times

The traffic surveys were undertaken during the following times; covering both the network and school AM and PM peak periods:

- AM (0700-1000); and
- PM (1500-1900).

3.2.5. Survey Date

Originally the traffic surveys were scheduled to take place in November 2017, however due to roadworks in the area (with the potential of having a significant impact on traffic), the surveys were ultimately undertaken on Tuesday 5th December 2017.

Analysis of traffic flows on the A3 confirms that the survey data obtained is reflective of neutral traffic conditions within the study area.

4. Strategic Traffic and The Square

4.1. Introduction

For the purpose of this study, strategic traffic is defined as external traffic travelling between Haslemere and the A3 via the double mini-roundabouts (The Square). Strategic traffic is perceived as being a significant albeit unnecessary contributor to peak period congestion at the double mini-roundabouts; with route planning software and signage on the A3 directing traffic through Liphook on route to / from Haslemere.

This chapter considers the impact of strategic traffic that was observed travelling through the Liphook double mini-roundabouts (The Square).

4.2. Signage

As shown in **Figure 4-1**, traffic travelling in an eastbound direction on the A3 is directed to Haslemere via the double mini-roundabouts in Liphook.

Figure 4-1 A3 (Eastbound) to Haslemere – Selected Signage Review

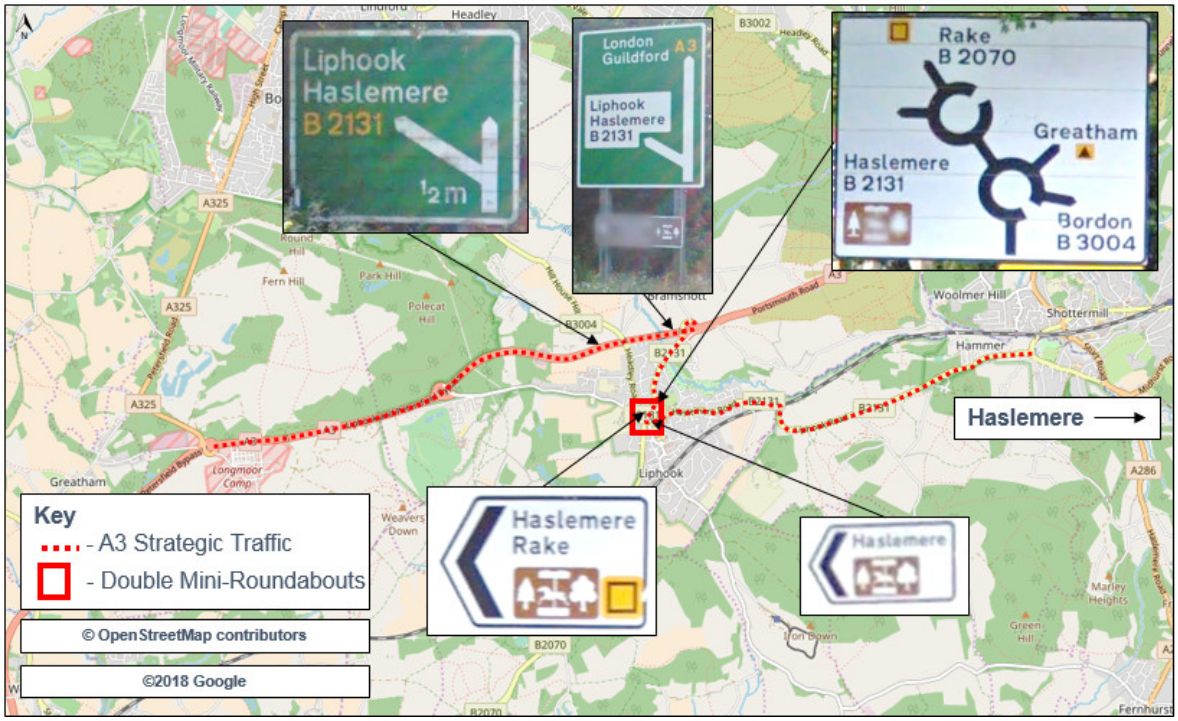

4.3. Route Planning

When using route planning software during weekday peak periods (i.e. google maps using the shortest travel time parameter), A3 traffic is directed to Haslemere via Bramshott Common (accessed off the A3 to the east of Liphook) and not via the double mini-roundabouts at The Square (as shown in **Figure 4-2**). This is a more appropriate route given the existing traffic problems in Liphook.

Figure 4-2 A3 (Eastbound) to Haslemere – Via Bramshott Common

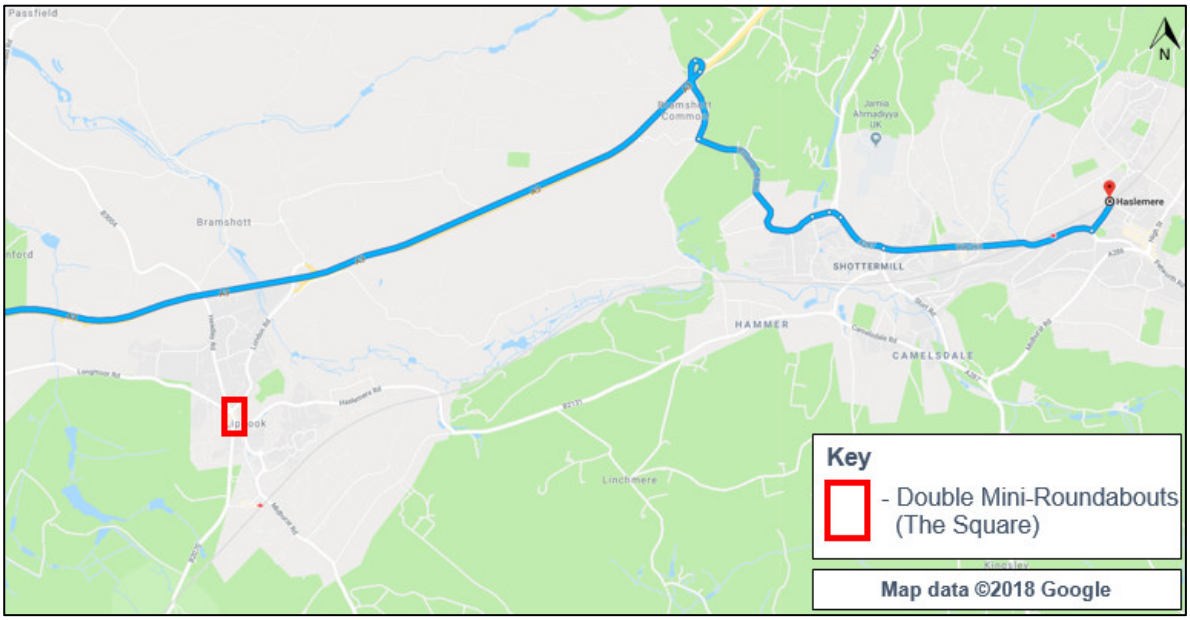

Notwithstanding the above route planning advice, the distance (in miles) to Haslemere from locations to the north-west (e.g. Bordon) and south-west (e.g. Petersfield) is less when travelling via Liphook. Consequently, A3 travellers using route planning software using the shortest distance parameter would be directed through Liphook as per current signage.

4.4. School Drop-Off / Pick-Up

This section also considers strategic traffic (as well as local traffic) that is travelling through Liphook to drop-off / pick-up school children at the following locations (as shown in **Figure 4-3**):

- Liphook Church of England (C. of E.) Controlled Junior School;
- Liphook Infant School; and
- Bohunt School.

It is unlikely that any strategic mitigation option could remove the need for these trips to travel through The Square.

Figure 4-3 Strategic Traffic – School Drop-Off / Pick-Up

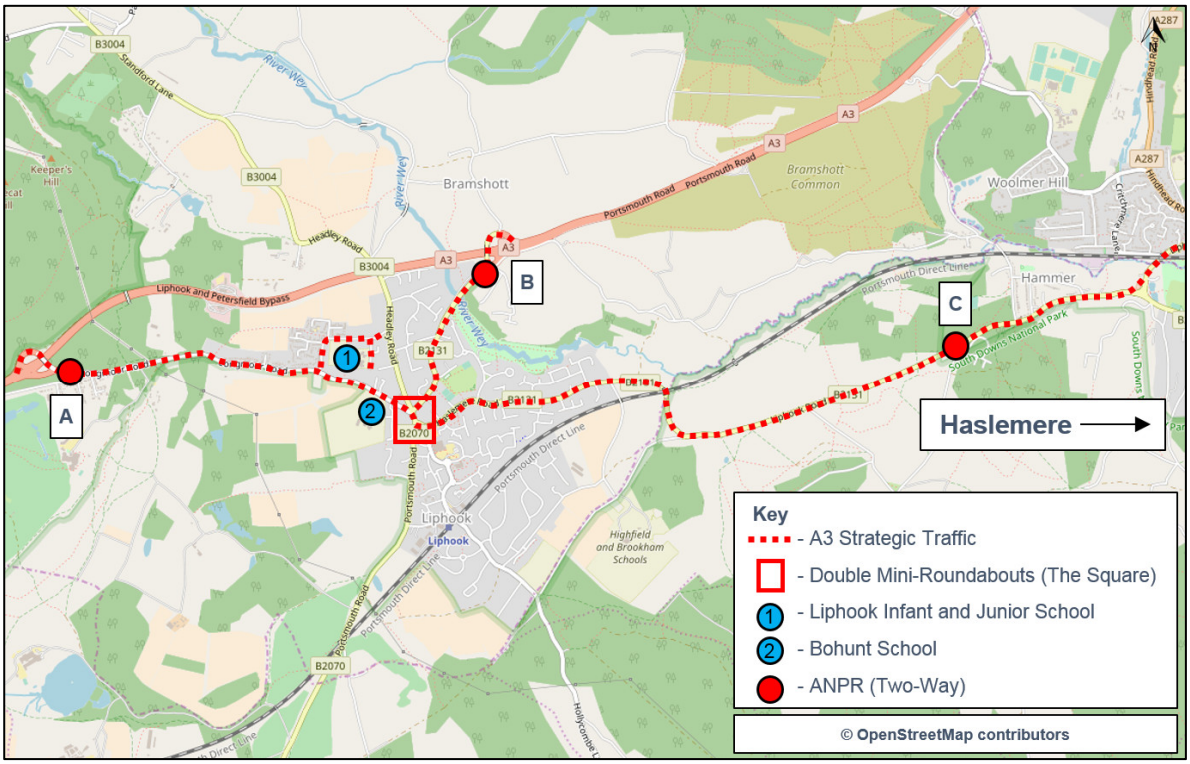

4.5. Survey Results

The following section outlines the proportion of strategic traffic (excluding those dropping off at school) travelling through Liphook during the survey periods.

4.5.1. AM (0700-1000)

A total of 60 vehicles travelled via the double mini-roundabouts from the A3 to Haslemere (ANPR site C) in the AM (0700-1000) peak; with 31 vehicles accessing Liphook via the A3 at Longmoor Road (ANPR site A) and 29 vehicles via London Road (ANPR site B).

A total of 47 vehicles were recorded accessing the A3 from Haslemere (ANPR C) via the double mini-roundabouts in the AM (0700-1000) peak; with 33 accessing via Longmoor Road (ANPR A) and 14 vehicles via London Road (ANPR B).

4.5.2. PM (1500-1900)

A total of 159 vehicles travelled via the double mini-roundabouts from the A3 to Haslemere (ANPR C) in the PM (1500-1900) peak; with 26 vehicles accessing Liphook via the A3 at Longmoor Road (ANPR A) and 133 vehicles via London Road (ANPR B).

A total of 111 vehicles were recorded accessing the A3 from Haslemere (ANPR C) via the double mini-roundabouts in the PM (1500-1900) peak; with 73 accessing via Longmoor Road (ANPR A) and 38 vehicles via London Road (ANPR B).

4.6. Average ANPR Journey Time

Table 1 outlines the average journey time for vehicles travelling between the A3 (ANPR sites A and B as shown in Figure 4-3) and Haslemere (ANPR site C). School traffic has been excluded from these calculations.

Table 1 Strategic Vehicles - Average Journey Time

Route	AM Peak (0700-1000)	PM Peak (1500-1900)
A3 (via Longmoor Rd) to Haslemere (ANPR A-C)	10 mins	10 mins
A3 (via London Rd) to Haslemere (ANPR B-C)	8 mins	12 mins
Haslemere to A3 (via Longmoor Rd) (ANPR C-A)	11 mins	11 mins
Haslemere to A3 (via London Rd) (ANPR C-B)	13 mins	12 mins

As shown in Table 1, the average journey time of strategic traffic travelling between the A3 and Haslemere is under 13 minutes.

4.7. School Drop-Off / Pick-Up

Table 2 outlines the volume of strategic traffic travelling on route between the A3 and Haslemere that stop off at either Liphook Infant and Junior School as well as Bohunt School (with no other intermediary stops). The time the journey took is shown in brackets.

Table 2 Strategic Vehicles – School Drop-Off / Pick-Up

Route	AM Peak (0700-1000)	PM Peak (1500-1900)
A3 (via Longmoor Rd) to Haslemere (ANPR A-C)	1 (13 mins)	0
A3 (via London Rd) to Haslemere (ANPR B-C)	1 (14 mins)	1 (18 mins)
Haslemere to A3 (via Longmoor Rd) (ANPR C-A)	1 (10 mins)	1 (28 mins)
Haslemere to A3 (via London Rd) (ANPR C-B)	0	0

4.8. Summary

The analysis presented above indicates that the volume of A3 strategic traffic travelling through Liphook (and the double mini-roundabouts at The Square) at peak times is low (accounting for c.2-3% of all traffic travelling between the double mini-roundabouts). Consequently, it is unlikely that a modified A3 signage strategy would have a significant impact (by reducing traffic volumes) on the operation of the double mini-roundabouts and the B2131 Haslemere Road / Midhurst Road mini-roundabout at peak times.

5. Traffic and The Square

5.1. Introduction

Utilising the results of both the ANPR and Junction Turning Count surveys, this chapter considers the impact of all traffic (local, external and strategic) that was observed:

- Travelling in and out of Liphook (which may not have travelled via the double mini-roundabouts); and
- All traffic which has travelled via the double mini-roundabouts.

This section also considers school traffic and Station Road traffic.

5.2. ANPR Captured Traffic Entering and Exiting Liphook

This section outlines the proportion of traffic captured by the ANPR cameras entering and exiting Liphook during the AM and PM survey periods.

5.2.1. AM Peak (0700-1000)

5.2.1.1. All Traffic

Table 3 outlines the proportion of all traffic (local, external and strategic) captured by the ANPR cameras entering and exiting Liphook (via all roads) during the AM peak period which may or not may have had an intermediary stop.

Table 3 ANPR Captured Traffic Entering and Exiting Liphook

Route	Vehicle No.	% of traffic
All Traffic Entering Liphook (4237 Vehicles)		
Traffic entering and then exiting Liphook (via all roads)	2477	57%
Traffic entering (via all roads) and staying in Liphook	1850	43%
All Traffic Exiting Liphook (5232 Vehicles)		
Traffic entering and then exiting Liphook (via all roads)	2477	47%
Local traffic exiting Liphook (via all roads)	2755	53%

As shown in Table 3, a roughly even split of external and local traffic enters and exits Liphook in the AM peak.

5.2.1.2. Through Traffic

In terms of the 2,477 vehicles entering and exiting Liphook (via all roads) during the AM peak period, 1,811 vehicles (73%) were through traffic (i.e. no intermediary stop; a journey time <30 minutes).

Table 4 outlines the percentage of this traffic which originates / exits via the A3 (which includes those strategic vehicles as outlined in **Section 3**) or the local roads (i.e. Headley Road and Midhurst Road) leading into / out of Liphook.

Table 4 Traffic Entering and Exiting Liphook (Through Traffic)

Route	Vehicle No.	% of traffic
Through Traffic Entering Liphook (1811 Vehicles)		
Originating from the A3	424	23%
Originating from local roads	1387	77%
Through Traffic Exiting Liphook (1811 Vehicles)		
Exiting via the A3	563	31%
Exiting via local roads	1248	69%

As shown in Table 4, the majority of through traffic enters and exits Liphook via local roads and is therefore considered to be local traffic.

5.2.2. PM (1500-1900)

5.2.2.1. All Traffic

Table 5 outlines the proportion of all traffic (local, external and strategic) captured by the ANPR cameras entering and exiting Liphook (via all roads) during the PM peak period which may or not may have had an intermediary stop.

Table 5 ANPR Captured Traffic Entering and Exiting Liphook

Route	Vehicle No.	% of traffic
All Traffic Entering Liphook (6526 Vehicles)		
Traffic entering and then exiting Liphook (via all roads)	3555	54%
Traffic entering (via all roads) and staying in Liphook	2971	46%
All Traffic Exiting Liphook (6677 Vehicles)		
Traffic entering and then exiting Liphook (via all roads)	3555	53%
Local traffic exiting Liphook (via all roads)	3122	47%

As shown in Table 5, a roughly even split of external and local traffic enters and exits Liphook in the PM peak.

5.2.2.2. Through Traffic

In terms of the 3,555 vehicles entering and exiting Liphook (via all roads) during the PM peak period, 2,601 vehicles (73%) accounted for through traffic (i.e. no intermediary stop; a journey time <30 minutes).

Table 6 outlines the percentage of this traffic which originates / exits via the A3 (which includes those strategic vehicles as outlined in **Section 3**) or the local roads (i.e. Headley Road and Midhurst Road) leading into / out of the village.

Table 6 Traffic Entering and Exiting Liphook (Through Traffic)

Route	Vehicle No.	% of traffic
Through Traffic Entering Liphook (2601 Vehicles)		
Originating from the A3	967	37%
Originating from local roads	1634	63%
Through Traffic Exiting Liphook (2601 Vehicles)		
Exiting via the A3	519	20%
Exiting via local roads	2082	80%

As shown in Table 6, the majority of through traffic enters and exits Liphook via local roads in the PM peak and is therefore considered to be local traffic.

5.3. Predominant Vehicle Movement

The majority of vehicles entering and exiting Liphook during the AM and PM peak was recorded travelling via the following roads:

- AM (0700-1000)
  - Most vehicles entered Liphook from Headley Road (1386 vehicles); and
  - Most vehicles exited Liphook from London Road (and the A3) (1476 vehicles).
- PM (1500-1900)
  - Most vehicles entered Liphook from London Road (and the A3) (2082 vehicles); and
  - Most vehicles exited Liphook from Headley Road (1867 vehicles).

The analysis of the ANPR surveys demonstrated that the predominant vehicle movement recorded (Matched Origin / Destination Pairs) in Liphook during the AM (0700-1000) survey period was traffic originating from Headley Road (to the north of Liphook) and exiting via London Road (to the north-east of Liphook). A total of 292 vehicles were recorded undertaking this movement.

With only 57 vehicles recorded during the Junction Turning Counts as travelling from Headley Road to London Road during the AM (0700-1000) survey at the northern mini-roundabout at The Square (as shown in Figure 4-3) it can be assumed that the majority of vehicles are travelling via Tower Road (incorporating Tunbridge Crescent and The Mead) avoiding The Square as shown in **Figure 5-1**.

The analysis of the ANPR surveys also demonstrated that the predominant vehicle movement undertaken in Liphook during the PM (1500-1900) survey period was traffic travelling between London Road and Headley Road (which is a reversal of the AM (0700-1000) trend). A total of 352 vehicles were recorded during the ANPR surveys undertaking this movement.

With only 77 vehicles recorded during the Junction Turning Counts as travelling from London Road to Headley Road during the PM (1500-1900) survey at the northern mini-roundabout at The Square (as shown in Figure 4-4) it can be assumed that the majority of vehicles are travelling via Tower Road (incorporating The Mead and Tunbridge Crescent as shown in Figure 5-1) thus again, avoiding The Square.

Figure 5-1 Headley Road - London Road Routing (via Tunbridge Crescent and The Mead)

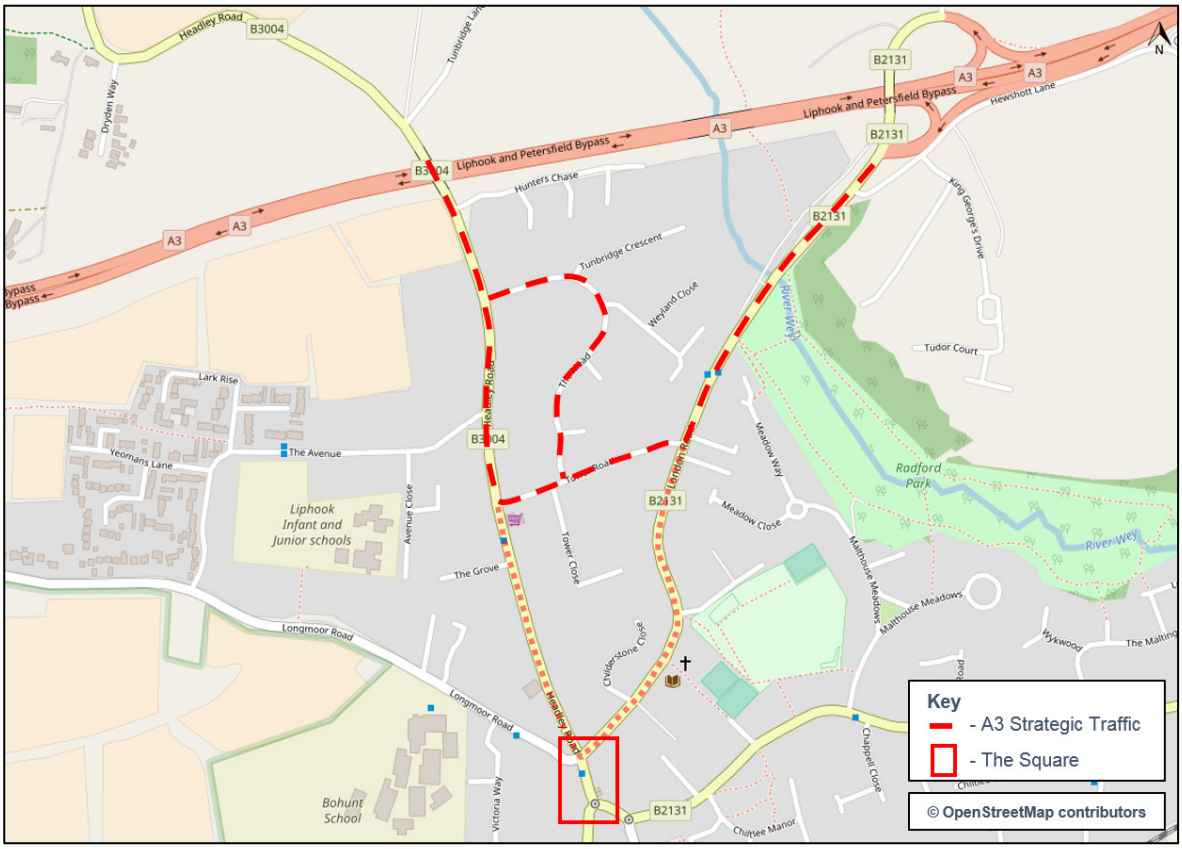

5.3.1. Summary

The predominant movement recorded during the ANPR surveys for the AM and PM peak period (Headley Road to London Road and vice-versa) suggests that traffic from Whitehill and Bordon (to the north-west of Liphook) is accessing / egressing the A3 via Liphook instead of the A325 at Longmoor to the west of Liphook. This may reflect current congestion at the Longmoor Junction and it being quicker to go via Liphook. It should be noted that road works were being carried out on the A325 at Whitehill and Bordon to the new roundabouts at the southern end of the new relief road during the traffic surveys, which may have inadvertently skewed the results.

Furthermore, none of the strategic mitigation options proposed would fundamentally accommodate this movement.

5.4. Double Mini-Roundabouts

Table 7 and **Table 8** outline the proportion of Liphook traffic that is considered local (i.e. with an origin or destination within Liphook) or external (i.e. non-local traffic passing through Liphook, including those strategic vehicles as outlined in Section 3) in relation to the traffic movements at the double mini-roundabouts for the AM (0700-1000) and PM (1500-1900) peak.

5.4.1. AM Peak (0700-1000)

Table 7 Double Mini-Roundabouts (0700-1000)

Route	Vehicle No.	% of traffic
Traffic entering and exiting the Double Mini-Roundabouts (c.4500 Vehicles)		
Traffic entering and then exiting Liphook (via all roads) – External Traffic	c.1500	c.35%
Local Traffic	c.3000	c.65%

As shown in Table 7, during the AM peak (0700-1000) the majority of traffic travelling through the double mini-roundabouts is local traffic.

5.4.2. PM (1500-1900)

Table 8 Double Mini-Roundabouts (1500-1900)

Route	Vehicle No.	% of traffic
Traffic entering and exiting the Double Mini-Roundabouts (c.7000 Vehicles)		
Traffic entering and then exiting Liphook (via all roads) – External Traffic	c.2500	c.35%
Local Traffic	c.4500	c.65%

As shown in Table 8 during the PM peak (1500-1900) the majority of traffic travelling through the double mini-roundabouts is again local traffic.

5.5. School Pick-Up / Drop-Off

This section considers the proportion of school pick-up / drop-off traffic that is considered to be local or external.

During the AM (0700-1000) and PM (1500-1900) peak, a total of 599 registration plates were recorded dropping-off / picking-up school children. These number plates were identified within the ANPR surveys and can be categorised as follows.

Table 9 Vehicles – School Drop-Off / Pick-Up

Traffic	No. of Vehicles	% of traffic
Traffic entering and exiting Liphook (via all roads)	190	31%
Traffic entering (via all roads) and staying in Liphook	176	29%
Local traffic exiting Liphook (via all roads)	189	31%
Local traffic staying in Liphook	44	7%
Total Vehicles	599	100%

As shown in Table 8, the majority of traffic that pick-up / drop-off school children is local traffic (all traffic outlined in the table above excluding traffic entering and exiting Liphook).

5.5.1. Predominant Vehicle Movement

The most vehicles entering and exiting Liphook during the AM and PM peak to drop-off / pick-up school children was via the following roads:

- AM (0700-1000)
  - Most vehicles entered (87 vehicles) and exited (57 vehicles) Liphook from Headley Road to drop-off school children; and
- PM (1500-1900)
  - Most vehicles entered (98 vehicles) and exited (106 vehicles) Liphook from Headley Road to pick-up school children.

Furthermore, in terms of the 190 vehicles that enters and exits Liphook (via all roads) that pick-up / drop school children, on average 26% (49 vehicles (including the five strategic vehicles travelling to / from the A3 and Haslemere) access and exit via the A3).

5.5.2. School Drop-Off / Pick-Up – Use of The Avenue

The manual number plate surveys undertaken on the roads in the vicinity of both Liphook Infant and Junior School and Bohunt School were fundamentally undertaken to identify traffic that is dropping-off / picking-up school children, however they were also undertaken due to the following:

- There is a perception that The Avenue is being utilised as a drop-off / pick-up for pupils associated with Bohunt School (thus avoiding The Square) resulting in congestion and conflict with residential and Liphook Infant and Junior School traffic.

To understand if this occurs in practice, the roads in the vicinity of the schools were divided into zones. Vehicles associated with each of the schools were then recorded dropping-off / picking-up in each zone.

Figure 5-2 illustrates the zones and the number of vehicles associated with each school dropping-off / picking-up in each zone as follows:

- Zone 1 – The Avenue (from the junction with Headley Road to the junction with Avenue Close (incorporating Liphook Infant and Junior School) and Avenue Close itself;
- Zone 2 – The Avenue (from the junction with Avenue Close to the junction with Lark Rise);
- Zone 3 – The Avenue (from the junction with Lark Rise to the junction with Longmoor Road);
- Zone 4 – Longmoor Road (from the junction with The Avenue to the layby comprising a pedestrian access to Liphook Infant and Junior School);
- Zone 5 – Longmoor Road (from the pedestrian access layby to the junction with Victoria Way (incorporating Bohunt School); and
- Zone 6 – Longmoor Road (from the Victoria Way junction to The Square, incorporating the Royal Anchor Public House Car Park).

Figure 5-2 School Drop-Off / Pick-Up Surveys

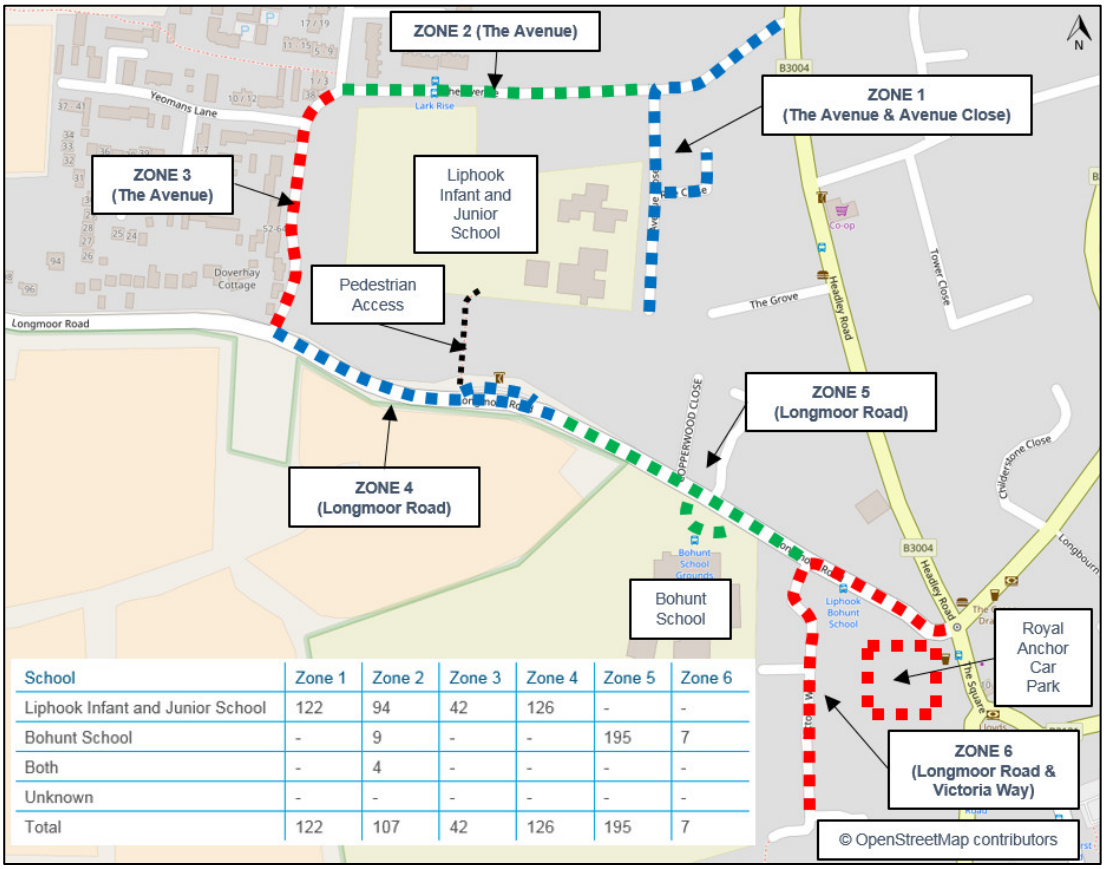

School	Zone 1	Zone 2	Zone 3	Zone 4	Zone 5	Zone 6
Liphook Infant and Junior School	122	94	42	126	-	-
Bohunt School	-	9	-	-	195	7
Both	-	4	-	-	-	-
Unknown	-	-	-	-	-	-
Total	122	107	42	126	195	7

5.5.3. Summary

As shown in Figure 5-2:

- Vehicles in Zone 1 / 2 / 3 / 4 were predominately recorded dropping-off / picking-up pupils from Liphook Infant and Junior School (384 vehicles);
- Nine vehicles were recorded dropping-off / picking-up pupils from Bohunt School in Zone 2;
- Four vehicles were recorded each dropping-off / picking-up pupils from both schools (via Zone 2); and
- 202 vehicles were recorded dropping-off / picking-up pupils from Bohunt School via Zone 5 and Zone 6.

The results indicate that only nine vehicles were recorded dropping-off / picking-up pupils from Bohunt School along The Avenue, therefore the results of the traffic surveys do not support the current perception as generally pupils of Bohunt School do not get dropped off on The Avenue.

5.6. Station Road

An additional requirement of the study brief was to monitor traffic travelling between Haslemere and the B2070 Portsmouth Road via Station Road and not via the double mini-roundabouts at The Square (due to congestion). Consequently, ANPR location G (Station Road) was incorporated into the survey programme (as shown in Figure 3-1).

Table 10 outlines that number of vehicles recorded travelling between these two locations and those that were recorded travelling via Station Road.

Table 10 Haslemere to Portsmouth Road (and vice-versa)

Movement Matrix	AM (0700-1000)		PM (1500-1900)	
	No. of Vehicles	Via G – Station Rd (%)	No. of Vehicles	Via G – Station Rd (%)
C – Liphook Rd (Haslemere) to F – Portsmouth Rd	19	1 (5%)	66	21 (32%)
F – Portsmouth Rd to C – Liphook Rd (Haslemere)	36	6 (17%)	34	11 (32%)

As shown in Table 10, the following number of vehicles (and percentage of the total) were recorded travelling via Station Road:

- AM survey period – 1 out of 19 vehicles (5%); and
- PM survey period – 21 out of 66 vehicles (32%).

In terms of vehicles travelling in the opposite direction via Station Road:

- AM survey period – 6 out of 36 vehicles (17%); and
- PM survey period – 11 out of 34 vehicles (32%).

It can be concluded that the majority of vehicles travelling between Haslemere and Portsmouth Road travel via The Square and not Station Road (with a maximum of 32% travelling via. Station Road (and presumably Liphook Rail Station)).

Furthermore, **Table 11** illustrates the number of vehicles recorded travelling along Station Road (in both directions) in the AM (0700-1000) and PM (1500-1900) peak that originated or had a destination outside of Liphook.

Table 11 Station Road Traffic

Traffic	AM (0700-1000)		PM (1500-1900)	
	No. of Vehicles	%	No. of Vehicles	Via G – Station Rd (%)
Total Traffic	1343	-	1862	-
Traffic with an origin / destination outside of Liphook	484	36%	670	36%
Local Traffic	859	64%	1192	64%

As shown in Table 11, the results of the ANPR survey indicate that the majority of trips along Station Road is local traffic.

6. Strategic Mitigation Options

6.1. Introduction

This section provides a high-level assessment of the strategic mitigation options utilising the analysis presented earlier in this report.

6.2. Strategic Mitigation Options

The five strategic options are shown in **Figure 6-1** with a detailed description from the Phase I study outlining the benefits and constraints of each option also provided underneath.

Figure 6-1 Strategic Mitigation Options and corresponding ANPR Locations

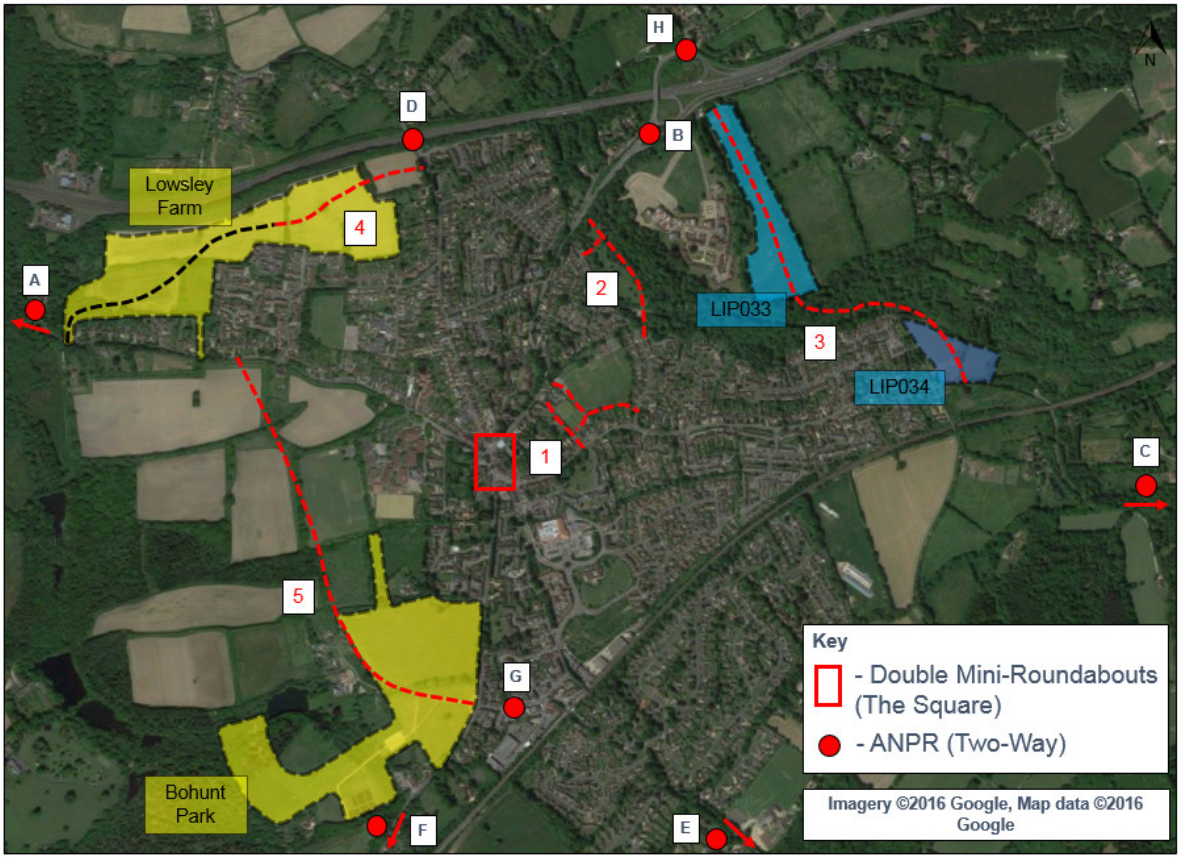

6.2.1. Option 1 – B2131 Haslemere Road to B2131 London Road Link

This option would involve construction of a new short road link through the recreational area directly to the east of the centre of Liphook.

Benefits

- Could be developed to allow a one-way gyratory to operate within the centre of Liphook; with the new road link forming the eastern side, B2131 Haslemere Road the southern side, B2131 London Road the northern side and the area connecting the existing double mini-roundabouts as the western side;
- A one-way gyratory could potentially provide additional benefits associated with the removal of opposed right turn movements;
- Relatively short section of link road required; and
- Does not cross over the River Wey.

Constraints

- It is understood that the area in question is the 'Memorial Recreation Ground', which is a Memorial to those that fell during the First World War.

6.2.2. Option 2 – Meadow Way or Malthouse Meadows to B2131 London Road Link

This option would involve construction of a new road link through Radford Park to connect B2131 London Road with either Meadow Way or Malthouse Meadows.

Benefits

- Relatively short section of link road required; and
- Does not cross over the River Wey.

Constraints

- May require demolition of six garages; and
- Encroaches upon Radford Park; one of the old water meadows within Bramshott and Liphook and now a designated area for leisure and recreation.

6.2.3. Option 3 – New Eastern Developments Link Road

This option would complement future housing allocations included in the 'Strategic Housing Land Availability Assessment 2014[2]'. It would involve constructing a new road link through housing allocation sites LIP033 (Land East of Bramshott Place) and LIP034 (Land East of Stonehouse Road and north of Haslemere Road) which would need to be connected via a new structure across the River Wey.

Benefits

- Utilises future housing allocations within Liphook and could be included as part of the developments masterplans.

Constraints

- Potential encroachment upon Radford Park; one of the old water meadows within Bramshott and Liphook and now a designated area for leisure and recreation; and
- Link road would need to cross the River Wey and could therefore require expensive infrastructure.

6.2.4. Option 4 – Lowsley Farm Link Road

This option consists of extending the Lowsley Farm access road to form a link with the B3004 Headley Road.

Benefits

- Would improve the east-west accessibility of the area;
- May reduce traffic flows past the schools on The Avenue;
- Minimise the need for 'Lowsley Farm' development traffic to travel through the northern mini-roundabout in the centre of Liphook; and
- Relatively short section of link road required.

Constraints

- May result in further 'rat running' along The Mead and / or Tower Road;
- Would re-assign a relatively small proportion of peak period traffic through Liphook northern mini-roundabout;
- May encourage traffic to pass through small villages north of Liphook; and
- The link road would be aligned through an area of SANG (Suitable Alternative Natural Greenspace).

[2] East Hampshire District Council. *Strategic Housing Land Availability Assessment 2014 Included & Excluded Sites – Liphook*. Available online: http://www.easthants.gov.uk/sites/default/files/documents/LiphookSHLAA2014.pdf [Accessed: 22/05/18]

6.2.5. Option 5 – 'The Northcott Trust' Western Ring Road

This option would involve construction of a new road link through the South Downs Natural Park (SDNP).

Benefits

- Could possibly open up land for development, improve development land accessibility whilst also providing an alternative access to Bohunt School[3]; and
- Re-assign traffic generated from developments north of Liphook (Whitehill and Bordon) accessing Liphook (and the rail station) away from the Liphook double mini-roundabouts and small villages, north of Liphook.

Constraints

- The area is part of the South Downs Natural Park (SDNP).

6.3. High-Level Analysis

The following section outlines the range of flows that could bypass the double mini-roundabouts with each strategic mitigation option for the AM Peak hour (0730-0830) and PM Peak hour (1700-1800)).

To provide traffic forecasts for each of the strategic mitigation options, traffic flows recorded during the ANPR surveys (envisaged minimum traffic flows) and the Junction Turning Counts (envisaged maximum traffic flows) were reassigned using professional judgement in terms of possible routing of traffic to access the strategic mitigation options.

6.3.1. Phase I – Development Traffic

The high-level analysis has accounted for the following developments (that were outlined in the Phase I report) that were fully built out at the time of the traffic surveys:

- Silent Gardens – 128 dwellings; and
- Bohunt 6th Form College Expansion – 400 students and 21 staff.

It is understood that the remaining developments, Chitley Farm (100 dwellings) has been refused, and Lowsley Farm (330 dwellings) was partially built out at the time of the traffic surveys.

6.3.2. Potential Traffic Flows

The high-level analysis undertaken estimated that the following range of traffic flows (minimum flows which are vehicles recorded by the ANPR cameras and maximum flows which are vehicles recorded during the Junction Turning Counts) that could potentially divert away from the double mini-roundabouts:

- Strategic Mitigation Options 1 / 2 or 3 (which all provide a link from Haslemere Road to London Road and therefore each option is envisaged to potentially divert the same flows i.e. not cumulative)):
  - 171 to 583 vehicles in the AM (0730-0830) peak hour; and
  - 173 to 640 vehicles in the PM (1700-1800) peak hour.
- Strategic Mitigation Option 4 (north-west of The Square);
  - 50 to 128 vehicles in the AM (0730-0830) peak hour; and
  - 23 to 154 vehicles in the PM (1700-1800) peak hour.
- Strategic Mitigation Option 5 (west of The Square);
  - 83 to 442 vehicles in the AM (0730-0830) peak hour; and
  - 73 to 494 vehicles in the PM (1700-1800) peak hour.

The high-level analysis indicates that a strategic mitigation option which would provide a new road link between the east of Liphook (i.e. Haslemere Road) and the north of Liphook (i.e. London Road) would provide the greatest level of traffic relief to the double mini-roundabouts at The Square (i.e.

[3] The Northcott Trust. *A Strategic Vision for Liphook*. Available online: http://www.liphookvision.com/ [Accessed: 22/05/18]

Strategic Mitigation Options 1, 2 or 3). This is supported by the predominant movement recorded during the Junction Turning Counts at The Square (as shown in **Appendix B**).

6.3.3. Assessment of Strategic Mitigation Options

The following section outlines the assessment of the five strategic mitigation options (**Table 12**). It is a broad and subjective assessment based on the available data and professional judgment. The assessment has taken into consideration the following for each strategic mitigation option:

- Traffic relief to the double mini-roundabouts; and
- High-level analysis in terms of scheme costs (against the proposed benefit) including outlining known constraints and possible impact on local roads.

Table 12 Strategic Mitigation Options - High Level Scoring

Option	Traffic Relief (The Square)	Scheme Costs	Risks	Other Comments	Rating
Option 1 – B2131 Haslemere Road to B2131 London Road Link	High	Moderate	• Possible opposition - Memorial • Possibility of high reassignment of traffic along local roads	• Relatively short section of link road • Does not cross over the River Wey	1
Option 2 – Meadow Way or Malthouse Meadows to B2131 London Road Link	High	High	• Possible opposition (Radford Park) • Possible demolition of garages • Possibility of high reassignment of traffic along local roads	• Relatively short section of link road • Does not cross over the River Wey	2
Option 3 – New Eastern Developments Link Road	High	High	• Possible opposition (Radford Park) • Possibility of high reassignment of traffic along local roads • Very expensive	• Utilises (could be part of) future housing allocations • Does cross the River Wey • Relatively long section of link road	3
Option 4 – Lowsley Farm Link Road	Low	Moderate	• Aligned through an area of SANG	• Relatively short section of link road	5
Option 5 – 'The Northcott Trust' Western Ring Road	Medium	High	• Aligned through SDNP • Possibility of high reassignment of traffic along local roads • Very expensive	• Open up land for development • Improve accessibility to Bohunt School • Longest section of link road	4

The high-level assessment of the strategic mitigation options has resulted in the following ranking:

1. Option 1 – B2131 Haslemere Road to B2131 London Road Link;
2. Option 2 – Meadow Way or Malthouse Meadows to B2131 London Road Link;
3. Option 3 – New Eastern Developments Link Road;
4. Option 5 – 'The Northcott Trust' Western Ring Road; and
5. Option 4 – Lowsley Farm Link Road.

6.3.4. Summary

The high-level analysis of the strategic mitigation options suggests that Strategic Mitigation Options 1, 2 or 3 (which all provide a road link from Haslemere Road to London Road) could provide the most relief to the double mini-roundabouts but, could result in a reassignment of traffic along inappropriate local roads. These options were also identified in the Phase I study to have significant constraints in that they are currently aligned through the 'Memorial Recreation Ground' and 'Radford Park'. This is also applicable to Option 5 ('The Northcott Trust' Western Ring Road), which also has the constraint of being aligned through the SDNP and is estimated to be a very expensive option (due to the length and nature of the SDNP i.e. waterways etc.). Option 4 (The Lowsley Farm Link Road) is deemed not to be a viable option, providing the lowest relief to the double mini-roundabouts, including the constraint of being aligned through an area of SANG.

7. Conclusion

The study has concluded that a significant proportion of traffic travelling through the double mini-roundabouts is not strategic traffic, therefore a revised signage strategy is not warranted.

The high-level analysis of the strategic mitigation options suggests that Strategic Mitigation Options 1, 2 or 3 (which all provide a road link from Haslemere Road to London Road) could provide the most relief to the double mini-roundabouts but, could result in a reassignment of traffic along inappropriate local roads. These options were also identified in the Phase I study to have significant constraints in that they are currently aligned through the 'Memorial Recreation Ground' and 'Radford Park'. This is also applicable to Option 5 ('The Northcott Trust' Western Ring Road), which also has the constraint of being aligned through the SDNP and is estimated to be a very expensive option (due to the length and nature of the SDNP i.e. waterways etc.). Option 4 (The Lowsley Farm Link Road) is deemed not to be a viable option, providing the lowest relief to the double mini-roundabouts, including the constraint of being aligned through an area of SANG.

Therefore, it is recommended that further assessment is undertaken on the double mini-roundabouts at The Square (including the pedestrian crossing) to understand the potential relief that can be attributable to removing traffic from the network from the implementation of sustainable transport options / initiatives (i.e. school / workplace travel planning promoting cycling / walking / public transport and discouraging driving).

This is based on the following findings from the traffic surveys:

- A high proportion of traffic travelling through Liphook at peak times (particularly at the double mini-roundabouts) is local traffic;
- Most vehicles dropping-off / picking-up school children access and exit the schools via Headley Road; and
- None of the strategic mitigation options proposed would accommodate the predominant movement recorded during the ANPR surveys for the AM and PM peak period (Headley Road to London Road and vice-versa).

Appendices

Appendix A. Origin and Destination Survey Methods

Technical Note

Project:	Liphook Phase II Transport Feasibility Study		
Subject:	Origin and Destination Survey Methods		
Author:	Atkins	Atkins No.:	
Date:	July 2018	Icepac No.:	
		Project No.:	5161097
Distribution:	HCC	Representing:	Atkins

Origin and Destination Survey Methods

A number of survey methods are available to determine the origin and destination of strategic and local vehicular traffic within Liphook. These methods include:

- Automatic Number Plate Recognition (ANPR);
- Bluetooth;
- The North Hampshire Traffic Model (NHTM);
- Anonymised Mobile Network Data (MND); and
- INRIX (utilises Satellite Navigation data and fleet data).

An appraisal of the options is provided below in **Table 1** to determine the most appropriate (and cost effective) method for this study.

Table 1 Origin / Destination Traffic Survey Method Appraisal

Survey Method	Description	Pros / Cons	Suitability	Cost (circa)
ANPR	Utilising ANPR cameras (two-way) to record vehicle number plates.	• High sample size and accuracy • Relatively inexpensive	✓	£1000s
Bluetooth	Utilising Bluetooth sensors to pick-up Bluetooth codes emitted by passing vehicles.	• Lower sample size than ANPR	×	ANPR is more accurate
NHTM	Land Use Transport Model for North Hampshire.	• Not observed data • Liphook situated on the edge of the core area • Limited modelled data	×	N/A
MND	MND utilises journey paths between the network of 3G / 4G masts to understand trips. The data is anonymous.	• Comprehensive data • Very expensive • New data collection period and full analysis required	✓	£40,000 - £50,000
INRIX	INRIX predominately utilises Satellite Navigation data and fleet data.	• Comprehensive data • Biased towards fleet vehicles which are envisaged not to divert through Liphook.	×	N/A

As shown in Table 1, the most suitable method (based on sample size, quality and cost) for this study was ANPR surveys.

Appendix B. Junction Turning Counts

Technical Note

Project:	Liphook Phase II Transport Feasibility Study		
Subject:	Junction Turning Counts		
Author:	Atkins	Atkins No.:	
Date:	July 2018	Icepac No.:	
		Project No.:	5161097
Distribution:	HCC	Representing:	Atkins

Junction Turning Counts

1.1. Introduction

Junction Turning Counts were undertaken on the double mini-roundabouts at The Square and the B2131 Haslemere Road / Midhurst Road mini-roundabout (**Figure 1-1**).

Figure 1-1 Junction Turning Counts

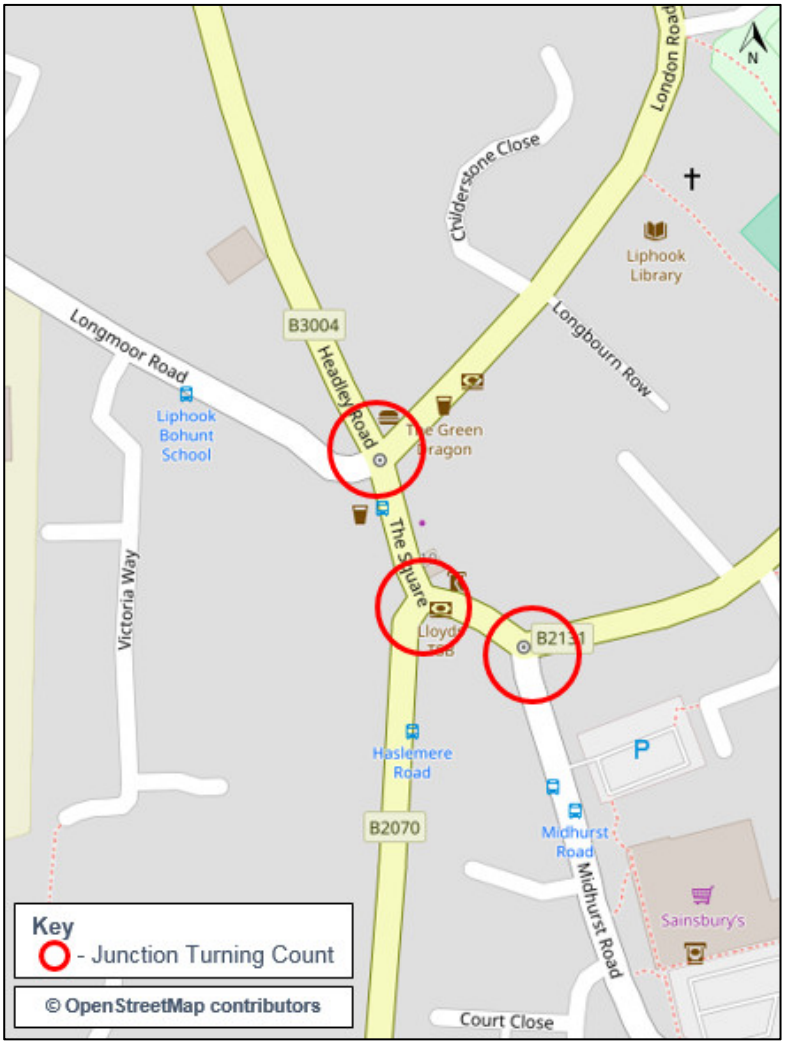

1.2. Overview

1.2.1. AM Survey (0700-1000)

The results of the Junction Turning Counts undertaken for the AM survey (0700-1000) is shown in **Figure 1-2**.

Figure 1-2 Junction Turning Count – AM (0700-1000)

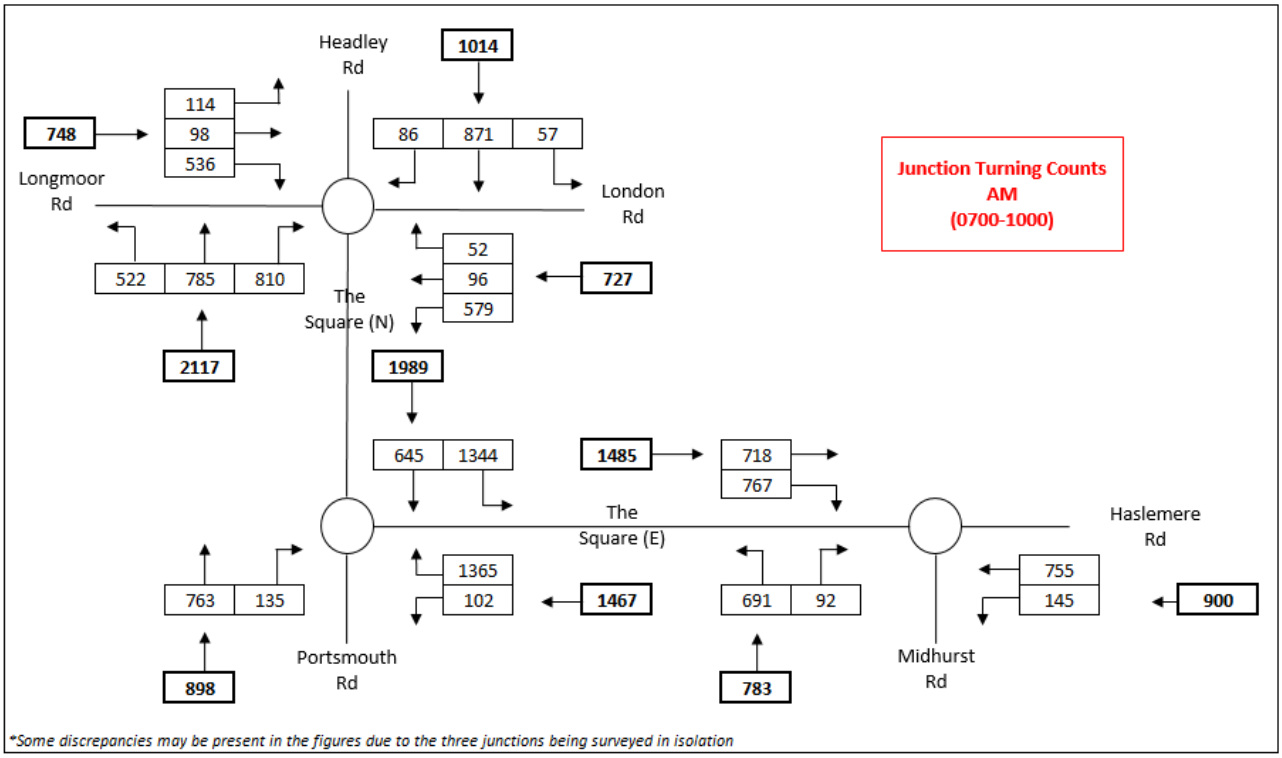

In relation to the traffic flows surveyed during the AM survey (0700-1000), the following patterns were observed:

- The northern mini-roundabout;
  - The highest traffic flow originated from The Square (N) (2117 vehicles); and
  - The highest traffic flow movement was Headley Road to The Square (N) (871 vehicles);
- The southern mini-roundabout;
  - The highest traffic flow originated from The Square (N) (1989 vehicles); and
  - The highest traffic flow movement was The Square (E) to The Square (N) (1365 vehicles);
- B2131 Haslemere Road / Midhurst Road mini-roundabout;
  - The highest traffic flow originated from The Square (E) (1485 vehicles); and
  - The highest traffic flow movement was The Square (E) to Midhurst Road (767 vehicles).

1.2.2. PM Survey (1500-1900)

The results of the Junction Turning Counts undertaken for the PM survey (1500-1900) is shown in **Figure 1-3**.

Figure 1-3 Junction Turning Count – PM (1500-1900)

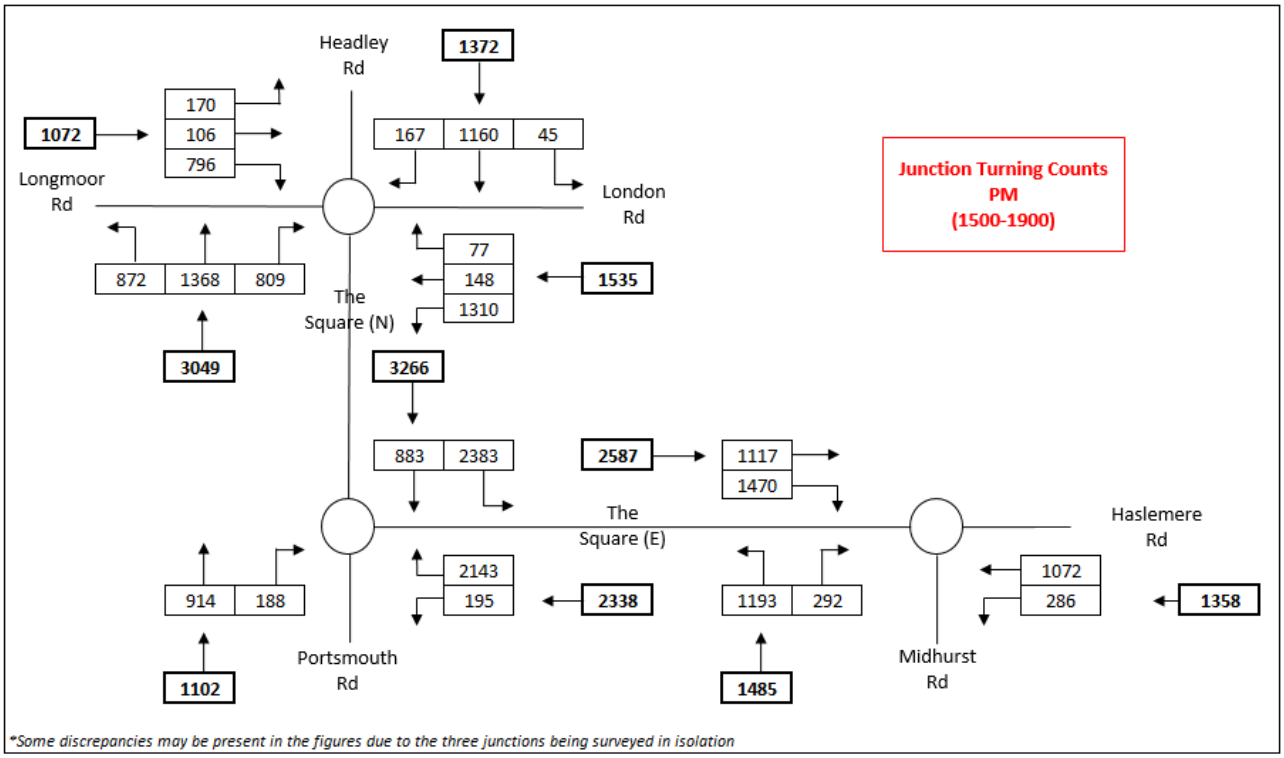

In relation to the traffic flows surveyed during the PM survey (1500-1900):

- The northern mini-roundabout;
  - The highest traffic flow originated from The Square (N) (3049 vehicles); and
  - The highest traffic flow movement was The Square (N) to Headley Road (1368 vehicles);
- The southern mini-roundabout;
  - The highest traffic flow originated from The Square (N) (3266 vehicles); and
  - The highest traffic flow movement was The Square (N) to The Square (E) (2383 vehicles);
- B2131 Haslemere Road / Midhurst Road mini-roundabout;
  - The highest traffic flow originated from The Square (E) (2587 vehicles); and
  - The highest traffic flow movement was The Square (E) to Midhurst Road (1470 vehicles).

1.2.3. AM Peak Hour (0730-0830)

The Junction Turning Count surveys indicated that the AM Peak hour at the mini-roundabouts was between 0730 and 0830. The results are shown in **Figure 1-4**.

Figure 1-4 Junction Turning Count – AM Peak Hour (0730-0830)

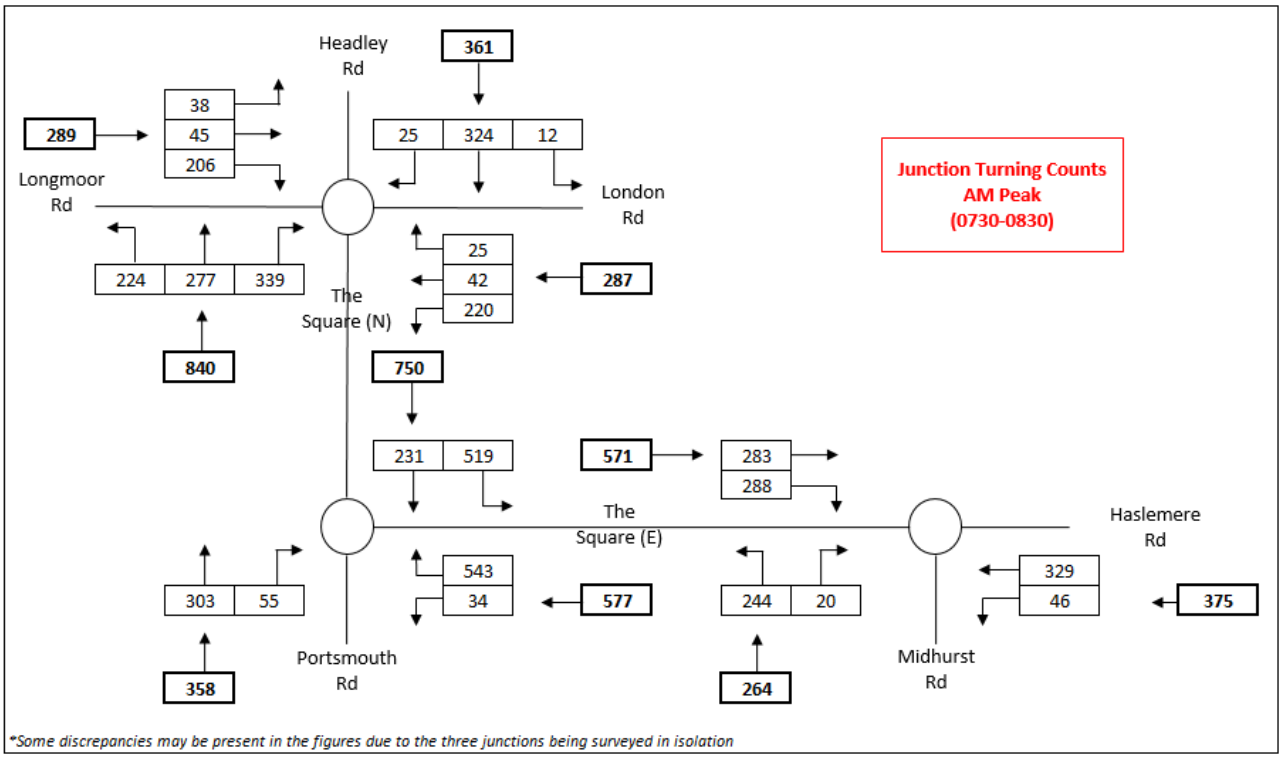

In relation to the traffic flows surveyed during the AM Peak hour (0730-0830):

- The northern mini-roundabout;
  - The highest traffic flow originated from The Square (N) (840 vehicles); and
  - The highest traffic flow movement was The Square (N) to London Road (339 vehicles);
- The southern mini-roundabout;
  - The highest traffic flow originated from The Square (N) (750 vehicles); and
  - The highest traffic flow movement was The Square (E) to The Square (N) (543 vehicles);
- B2131 Haslemere Road / Midhurst Road mini-roundabout;
  - The highest traffic flow originated from The Square (E) (571 vehicles); and
  - The highest traffic flow movement was Haslemere Road to The Square (E) (329 vehicles).

The Junction Turning Count surveys indicated that the PM Peak hour at the mini-roundabouts was between 1700 and 1800.

1.2.4. PM Peak Hour (1700-1800)

The results of the Junction Turning Counts for the PM Peak hour (1700-1800) is shown in **Figure 1-5**.

Figure 1-5 Junction Turning Count – PM Peak Hour (1700-1800)

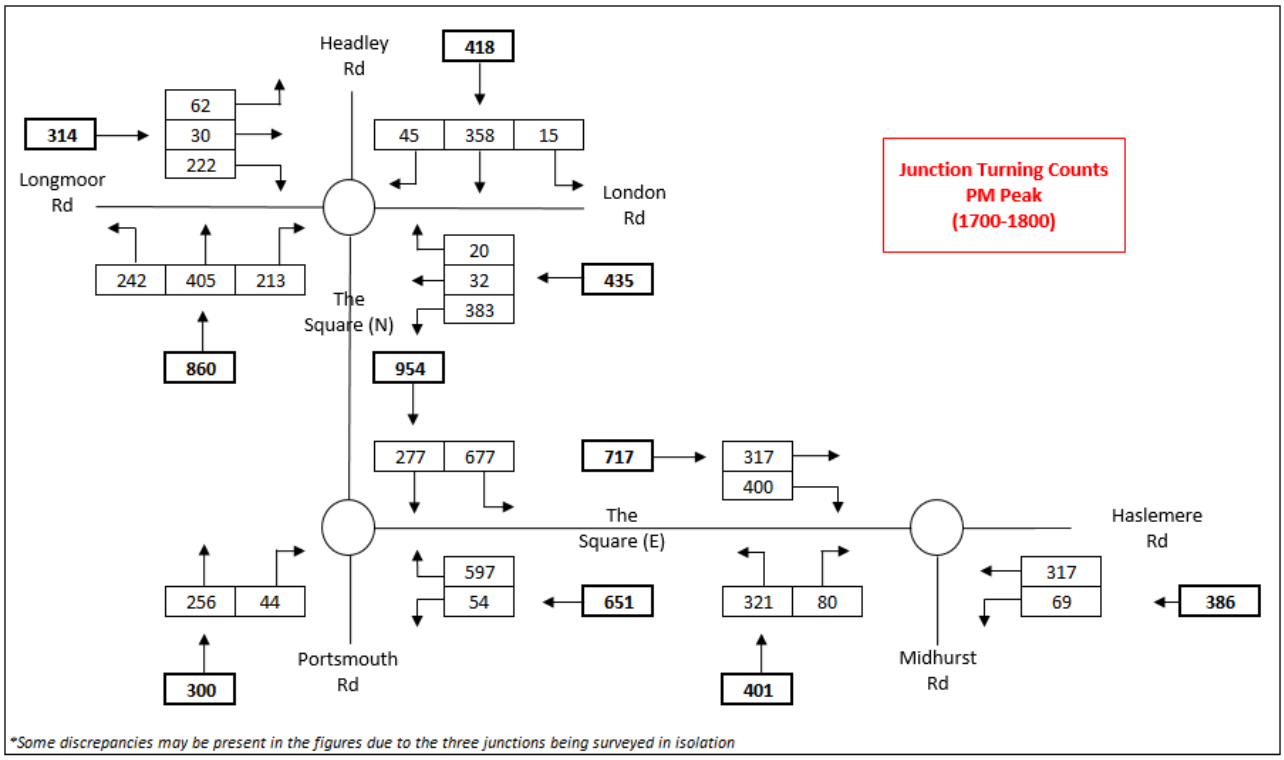

In relation to the traffic flows surveyed during the PM Peak hour (1700-1800):

- The northern mini-roundabout;
  - The highest traffic flow originated from The Square (N) (860 vehicles); and
  - The highest traffic flow movement was The Square (N) to Headley Road (405 vehicles);
- The southern mini-roundabout;
  - The highest traffic flow originated from The Square (N) (954 vehicles); and
  - The highest traffic flow movement was The Square (N) to The Square (E) (677 vehicles);
- B2131 Haslemere Road / Midhurst Road mini-roundabout;
  - The highest traffic flow originated from The Square (E) (717 vehicles); and
  - The highest traffic flow movement was The Square (E) to Midhurst Road (400 vehicles).